FANTASY SPAS®

50Hz OWNER'S MANUAL

FANTASY OWNER'S MANUAL

230V 50Hz System

Owner's Record

Locating the Spa Serial Number:

The spa serial number label is located on control box cover inside the equipment compartment. Equipment compartment access panel is below the spas 4-button topside control panel. You will need the spa model and serial number to properly register your spa and activate coverage. Write your spa information in the space provided.

DATE PURCHASED:
PURCHASED FROM:
SPA MODEL:
SERIAL NUMBER:

Please read this Owner's Manual carefully, as it is designed to provide you with the information you will need to ensure the safe, secure use of your spa.

IMPORTANT: Watkins Manufacturing Corporation reserves the right to change specifications and/or design without notification and without any obligation.

SPA DIMENSIONS & WEIGHT

Model	Spa Seating	Length	Width	Height	Dry Weight
Entice™	3 person	176 cm	206 cm	77 cm	172 kg
Embrace™	3 person	183 cm	183 cm	79 cm	148 kg
Splendor™	6 person	198 cm	198 cm	86 cm	165 kg
Drift™	4 person	178 cm	155 cm	81 cm	134 kg

CAUTION

DO NOT OPERATE SPA BEFORE READING THIS MANUAL

Failure to read this manual and follow its instructions may result in unsafe operation and or permanent damage to your portable spa.

Most cities, counties, states, and countries require permits for exterior construction and electrical circuits. In addition, some communities have codes requiring residential barriers such as fencing and/or self-closing gates on the property to prevent unsupervised access to a pool or spa by children. Be sure to check with your local agencies for specific requirements.

If you need additional information and/or assistance, please contact Customer Service in the US at +1 (760)-305-4400 or at ahsservice@watkinsmfg.com.

TABLE OF CONTENTS

TITLE	PAGE
SAFETY INFORMATION	
IMPORTANT SAFETY INSTRUCTIONS	1
IMPORTANT SPA INSTRUCTIONS	4
INSTALLATION	
PLANNING A LOCATION FOR YOUR SPA	5
PLACING THE SPA	6
EQUIPMENT ACCESS	
EQUIPMENT ACCESS PANEL	7
ELECTRICAL REQUIREMENTS	
ELECTRICAL REQUIREMENT	8
CONFIGURING SYSTEM	9
CONTROL PANEL OPERATION	
TEMPERATURE ADJUSTMENT (26°C - 40°C)	10
JETS OPERATION	10
MULTI COLOR LED LIGHT	10
OPERATIONAL MODE	10
PRESET FILTER CYCLES	11
FREEZE PROTECTION	11
DIAGNOSTIC LCD MESSAGE	12
COMPONENT OPERATION	
SPA COMPONENT OPERATION	13
FILL UP AND START-UP INSTRUCTIONS	
FILLING THE SPA WITH WATER	14
APPLYING POWER	14
ADDING START-UP CHEMICALS	
WATER CHEMISTRY GUIDELINES	15
SPA MAINTENANCE	
FILTER CARTRIDGE MAINTENANCE	16
SURFACE CARE	17
COVER CARE	17
CABINET CARE	17
SPA LED REPLACEMENT	17
DRAINING OR WINTERIZING	
DRAINING YOUR SPA	18
WINTERIZING YOUR SPA	18
TROUBLESHOOTING PROCEDURES	
NO COMPONENT OPERATION	19
PUMP DOES NOT OPERATE, BUT THE LIGHT DOES	19
POOR JET ACTION	19
WATER IS TOO HOT	19

IMPORTANT SAFETY INSTRUCTIONS

READ AND FOLLOW ALL INSTRUCTIONS

AVOIDING THE RISK TO CHILDREN

⚠ *DANGER:*

- **RISK OF CHILD DROWNING.** Extreme caution must be exercised to prevent unauthorized access by children. To avoid accidents, ensure that children cannot use a spa unless they are supervised at all times.

⚠ *WARNING:*

- To reduce the risk of injury, do not permit children to use this product unless they are closely supervised at all times.
- To reduce the risk of injury, lower water temperatures are recommended for young children. Children are especially sensitive to hot water.

DO:

- Make sure you always lock the child resistant locks after using the spa for your children's safety. Every spa is equipped with a locking cover that meets the ASTM F1346-91 Standard for Safety Covers.
- Test the water temperature with your hand before allowing your child to enter the spa to be sure that it's comfortable. Children are especially sensitive to hot water.
- Remind children that wet surfaces can be very slippery. Make sure that the children are careful when entering or exiting the spa.

DON'T:

- Allow children to climb onto the spa cover.
- Allow children to have unsupervised access to the spa.

AVOIDING THE RISK OF ELECTROCUTION

Risk of Electrocution

- Connect only to a grounded source.
- Do not bury the power cord. A buried power cord may result in death or serious personal injury due to electrocution if direct burial-type cable is not used, or if improper digging occurs.
- A ground terminal (pressure wire connector) is provided on the control box inside the unit to permit connection of a minimum 6 mm² solid copper bonding conductor between this point and any metal equipment, metal water pipe, metal enclosures of electrical equipment, or conduit within five feet (1.5 m) of the unit as needed to comply with local requirements.

⚠ *WARNING:*

- To reduce the risk of electrical shock, replace a damaged cord immediately. Failure to do so may result in death or serious personal injury due to electrocution.
- Your spa is provided with a Ground Fault Circuit Interrupter for user and equipment protection. To ensure proper operation of this important safety device, test according to the following instructions per electrical configuration.

SAFETY INFORMATION

- A ground terminal is provided on the control box. To reduce the risk of electric shock, connect this terminal to the grounding terminal of your electrical service or subpanel with a continuous green, insulated copper wire. The wire must be equivalent in size to the circuit conductors supplying the equipment. In addition, a bonding terminal (pressure wire connector) is provided on the outside of the control box for bonding to local ground points. To reduce the risk of electric shock, this connector should be bonded with a 8 mm^2 solid copper wire to any metal ladders, water pipes, or other metal within 1.5 m of the spa to comply with local requirements. The means of disconnection must be readily accessible, but must be installed at least 1.5 m from the spa.
- Your spa requires a suitably rated circuit breaker to open all ungrounded supply conductors.
- Your spa must have a ground fault circuit interrupter in an electrical subpanel. Before each use of the spa and with the unit operating, push the TEST button on the breaker. The switch should click over to the “Trip” position. Wait 30 seconds and reset the GFCI breaker by switching it completely off and then completely on. The switch should then stay on. If the interrupter does not perform in this manner, it is an indication of an electrical malfunction and the possibility of an electric shock. Disconnect the power until the fault has been identified and corrected.

  IMPORTANT: Failure to wait 30 seconds before resetting the GFCI may cause the spa’s Power Indicator (on the control panel) to blink. If this occurs, repeat the GFCI test procedure.

⚠ *DANGER: RISK OF ELECTRICAL SHOCK*

- Install spa at least 1.5 m from all metal surfaces. A spa may be installed within 5 feet of a metal surface if each metal surface is permanently connected by a minimum 6 mm^2 solid copper conductor attached to the wire ground connector on the terminal box that is provided for this purpose if in accordance with your national electrical code.
- Do not permit any electrical appliances, such as a light, telephone, radio, or television within 1.5 m of a spa. Failure to maintain a safe distance may result in death or serious personal injury due to electrocution if the appliance should fall into the spa.
- Install your spa in such a way that drainage is away from the electrical compartment and from all electrical components.

DO:

- Be sure your spa is connected to the power supply correctly - use a licensed electrical contractor.
- Disconnect the spa from the power supply before draining the spa or servicing the electrical components.
- Test the Ground Fault Circuit Interrupter(s) before each use.

DON’T:

- Use the spa with the equipment compartment door removed.
- Place electrical appliances within 1.5 m of the spa.
- Use an extension cord to connect the spa to its power source. The cord may not be properly grounded and the connection is a shock hazard. An extension cord may cause a voltage drop, which will cause overheating of the jet pump motor and motor damage.
- Attempt to open the electrical control box. There are no user serviceable parts inside.

SAFETY INFORMATION

RISKS TO AVOID

⚠ *DANGER: RISK OF INJURY*

- DO NOT sit in the filter compartment area. Sitting in this area can cause:
  a) Restriction of Filter Pump suction/vacuum b) Damage to components
- Both can result in bodily harm. Should damage occur to components in this area, replace immediately!

To reduce the risk of injury to persons, DO NOT remove floating weir, basket, and filter located in the filter compartment while the spa is running.

- The suction fittings in the spa are sized to match the specific water flow created by the pump. Never replace a suction fitting with one rated less than the flow rate marked on the original suction fitting.
- There is a danger of slipping and falling. Remember that wet surfaces can be very slippery. Take care when entering or exiting the spa.
- Never operate spa if the suction fittings are broken or missing.
- People with infectious diseases should not use the spa.
- Keep any loose articles of clothing or hanging jewelry away from rotating jets or other moving components.

Increased side effects of medication

- The use of drugs, alcohol or medication before or during spa use may lead to unconsciousness with the possibility of drowning.
- Persons using medications should consult a physician before using a spa; some medication may cause a user to become drowsy, while other medication may affect heart rate, blood pressure, and circulation.
- Persons taking medications which induce drowsiness, such as tranquilizers, antihistamines or anticoagulants should not use the spa.

Health problems affected by spa use

- Pregnant women should consult a physician before using spa.
- Persons suffering from obesity or with a medical history of heart disease, low or high blood pressure, circulatory system problems, or diabetes should consult a physician before using spa.

Unclean water

- Keep the water clean and sanitized with correct chemical care. The recommended levels for your your spa are: Free Available Chlorine (FAC): 3.0-5.0 ppm Total Alkalinity: 80 - 120 ppm
  Water pH: 7.2 - 7.8 Calcium Hardness: 100- 250 ppm

  IMPORTANT: Turn jet pump on for at least ten minutes after adding ANY spa water chemicals into the filter compartment.
- Clean the filter cartridge monthly to remove debris and mineral buildup which may affect the performance of the hydromassage jets, limit the flow, or trip the high-limit thermostat which will turn off the entire spa.

AVOIDING THE RISK OF HYPERTHERMIA

Prolonged immersion in hot water can result in HYPERTHERMIA, a dangerous condition which occurs when the internal temperature of the body reaches a level above normal 37ºC. The symptoms of hyperthermia include unawareness of impending hazard, failure to perceive heat, failure to recognize the need to exit the spa, physical inability to exit the spa, fetal damage in pregnant women, and unconsciousness resulting in a danger of drowning.

SAFETY INFORMATION

⚠ *WARNING:*

The use of alcohol, drugs, or medication can greatly increase the risk of fatal hyperthermia in hot tubs and spas.

TO REDUCE THE RISK OF INJURY:

- The water in the spa should never exceed 40°C. Water temperatures between 38°C and 40°C are considered safe for a healthy adult. Lower water temperatures are recommended for extended use (exceeding 10 minutes) and for young children. Extended use can cause hyperthermia.
- Pregnant or possibly pregnant women should limit spa water temperatures to 38°C. Failure to do so may result in permanent injury to your baby.
- Do not use spa immediately following strenuous exercise.

AVOIDING THE RISK OF SKIN BURNS:

- To reduce the risk of injury, before entering a spa the user should measure the water temperature with an accurate thermometer.
- Test the water with your hand before entering the spa to be sure it's comfortable.

SAFETY SIGN

A SAFETY SIGN in the owner's package. The sign, which is required as a condition of Product Listing, should be permanently installed where it is visible to the users of the spa.

IMPORTANT SPA INSTRUCTIONS

The following contains important spa information, and we strongly encourage you to read and apply them.

DO:

- Use and lock the vinyl cover when the spa is not in use, whether it is empty or full.
- Follow the Spa Care and Maintenance recommendations stated in this manual.
- Use only approved accessories and recommended spa chemicals and cleaners.

DON'T:

- Leave the spa exposed to the sun without water or the vinyl cover in place. Exposure to direct sunlight can cause solar distress of the shell material.
- Roll or slide the spa on its side. This will damage the siding.
- Lift or drag the cover by using the cover lock straps; always lift or carry the cover by using the handles.
- Attempt to open the electrical control box. There are no user serviceable parts inside. Opening of the control box by the spa owner will void the warranty. If you have an operational problem, carefully go through the steps outlined in the Troubleshooting section. If you are not able to resolve the problem, contact your authorized dealer. Many problems can easily be diagnosed over the telephone by an Authorized Service Technician.

PLANNING A LOCATION FOR YOUR SPA

Consider these things when determining where to place your spa.

SAFETY FIRST:

Make sure your spa is positioned so access to the equipment compartment and side panels will not be blocked. Be certain your installation will meet all city and local safety codes and requirements.

PLANNED USE OF SPA:

How you intend to use your spa will help you determine where you should position the spa. For example, will you use it more for recreational or therapeutic purposes? If your spa is mainly for family recreation, leave plenty of room around it for activity and lawn furniture. If you will use it more for relaxation and therapy, you'll probably want to create privacy around the spa.

PRIVACY:

Think of your surroundings during all seasons to determine your best privacy options. Consider the view of your neighbors when you plan the location of your spa.

VIEWS:

Think about the direction you will be facing when sitting in your spa. Do you have a special landscape you will find enjoyable? Perhaps there is an area that has a soothing breeze during the day or a lovely sunset in the evening.

ENVIRONMENT:

If you live in a climate with a snowy winter and hot summer, a place to change clothes or a house entry near the spa is convenient. A warmer climate may require shade from the hot sun. Consider placement of trees, shrubs, patio cover or perhaps a gazebo structure to provide what you will need. Indoor installations require adequate ventilation. When the spa is in use, considerable amounts of moisture are produced. This moisture can damage walls and ceiling surfaces over time. Special paint is available to resist moisture damage. Remember that spas periodically require drainage, so plan your environment accordingly.

KEEP CLEAN:

Prevent dirt and foliage from being tracked into your spa by utilizing concrete for paths and access areas. Check the location of spill paths from gutters, trees, and shrubs.

SERVICE ACCESS:

Many people choose to install tile or custom wood around their spas. If you are installing your tub with custom decorative trimming, remember to allow for access to it for service. Should you need service, a technician may need to remove the tub's door panel, or access it from beneath. It is always best to design special installations so the spa can still be moved, or lifted from the ground.

A GOOD FOUNDATION:

Your new spa needs a good solid foundation. The area your spa sits on must be able to support the spa, the water in it and those who use it. If the foundation is inadequate, it may shift or settle after the spa is in place, causing stress to the shell or components.

INSTALLATION

BE AWARE:

Damage caused by inadequate or improper foundation support is not covered by the spa warranty. It is the sole responsibility of the spa owner to provide a proper foundation for the spa.

Make sure the foundation where the spa is placed drains water away from the spa. Proper drainage will keep components dry from rain and wet weather.

Your spa weight must always be considered when installing your spa. If you are installing it on an elevated wood deck or other structure, it is advisable to consult a structural engineer or contractor to ensure the structure will support the weight.

IT IS STRONGLY RECOMMENDED THAT A QUALIFIED, LICENSED CONTRACTOR PREPARE THE FOUNDATION FOR YOUR SPA.

A reinforced concrete pad at least 10 cm thick is recommended for your spa. The reinforcing rod or mesh in the pad should be attached to a bonding wire.

INDOOR INSTALLATION:

Be aware of some special requirements if you place your spa indoors. Water will accumulate around the spa, so flooring materials must provide a good grip when wet. Proper drainage is essential to prevent a build-up of water around the spa. When building a new room for the spa, it is recommended that a floor drain be installed. The humidity will naturally increase with the spa installed. Water may get into woodwork and produce dryrot, mildew, or other problems. Check for airborne moisture's effects on exposed wood, paper, etc. in the room. To minimize these effects, it is best to provide plenty of ventilation to the spa area. An architect can help to determine if more ventilation must be installed.

PLACING THE SPA

CHECK THE DIMENSIONS OF YOUR SPA:

Compare the spa dimensions to the width of gates, sidewalks, and doorways along the delivery route used to bring the spa into your yard. It may be necessary for you to remove a gate or partially remove a fence in order to provide an unobstructed passageway to the installation location. Also, keep in mind—if you are using special equipment to place your spa into an area it will be necessary to include those measurements and weights.

PLANNING A DELIVERY ROUTE:

Check the width of gates, doors and sidewalks to make sure your spa will pass through unobstructed. You may have to remove a gate or part of a fence to allow for adequate width clearance. If the delivery route will require a 90-degree turn, check the measurements at the turn to ensure the spa will fit. Check for protruding gas meters, water meters, A/C units, etc., on your home which will cause obstructions along the delivery path to your yard. Check for low roof eaves, over hanging branches or rain gutters that could be an obstruction to overhead clearances.

SPECIAL CIRCUMSTANCES:

The use of a crane for delivery and installation is primarily to avoid injury to your spa, your property or to delivery personnel. Our Customer Service may be able to assist you with the arrangements. Cranes are not considered "normal delivery".

EQUIPMENT ACCESS PANEL

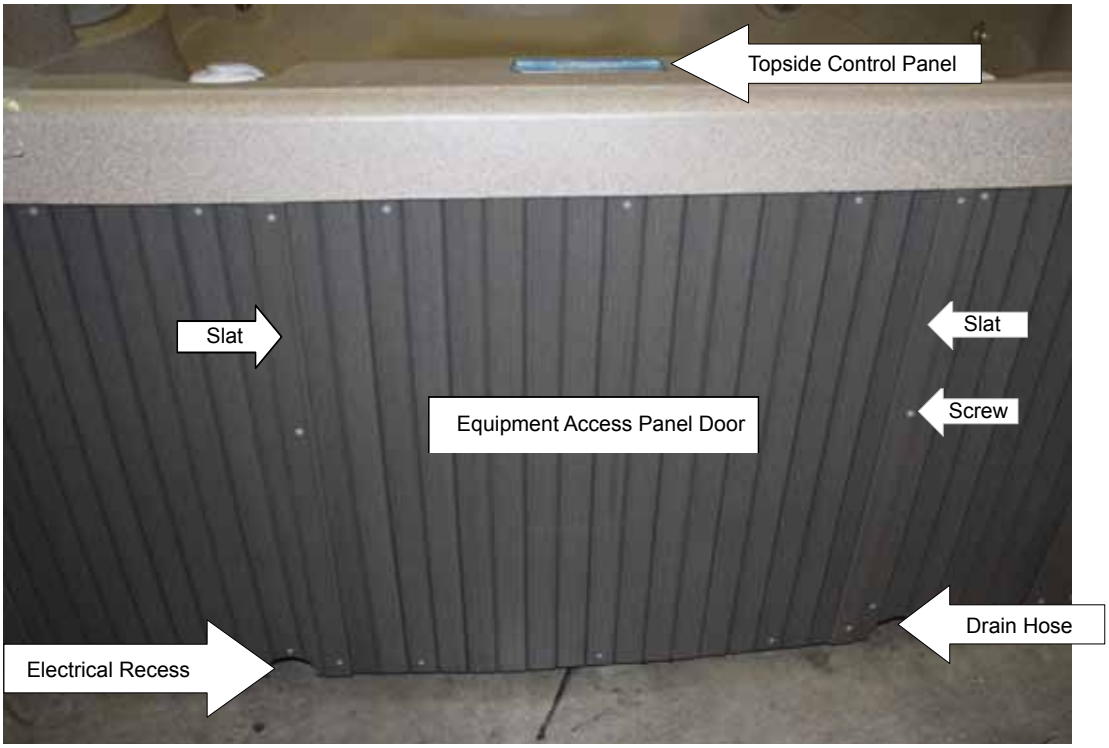

To access the equipment compartment:

- Remove 1 vertical slat and 3 screws on each side of Equipment Access Panel Door.
- Remove 6 screws from Equipment Access Panel Door then remove door.
- Remove screws from black ABS Door (if your spa has vertical slats) to access Equipment Compartment.

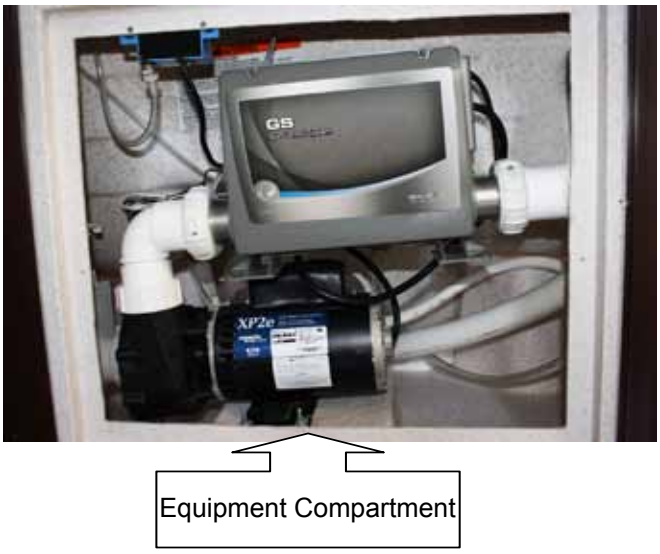

ELECTRICAL REQUIREMENT

⚠ DO NOT POWER THE SPA WITHOUT FIRST FILLING WITH WATER!

⚠ DANGER – RISK OF ELECTRIC SHOCK

Installations that do not conform to the following procedures and requirements may expose users to electric shock. Non-conforming installations will not be covered under warranty.

The electrical wiring of this spa must meet the requirements of your National Electric Code (NEC) and any applicable state or local codes. The electrical circuit must be installed by an electrical contractor and approved by a local building electrical inspection authority.

1. Installations within 1.5 m of any metal surfaces must ground the metal surfaces to the spa. Use an 8 mm² solid copper wire and attach it to the grounding lug on the control box, located in the equipment compartment.
2. Only a licensed electrician may install power to the spa.
3. Power supply installation must include a suitably rated ground fault circuit interrupter (GFCI) as required by your NEC. The circuit breaker must be dedicated and should not be shared with any other appliances. It must be labeled and easily accessible to users.
4. The electrical supply for the spa must include a suitable circuit breaker to open all ungrounded supply conductors to comply with your NEC. The disconnecting means must be readily accessible to the spa's occupant but installed at least 1.5 m from the spa water.
5. Power supply lines can use a 13 amp plug, or be hard wired into the power pack. A plug-type cord must be plugged into a GFCI box. When hard wired, the use of a shut-off box near the spa is also recommended. This box provides a quick and convenient method to shut off power to the spa for emergencies and maintenance.
6. Supply lines must be properly sized as per your NEC national electric code. A ground line must be provided that is as large as the largest current carrying conductor, but no less than 8 mm². Use copper wiring only.
7. Please open the front cover of the control box, and follow the instructions and wiring diagram printed on the backside.
8. 230V HARD WIRED SPAS

- Wire size must be appropriate per your national electric code and/or local codes.
- Wire size is determined by length of run from breaker box to spa and maximum current draw.
- All wiring must be copper to ensure adequate connections. Do not use aluminum wire.

Equipment access is below the topside control panel.

ELECTRICAL REQUIREMENTS

CIRCUIT BREAKER REQUIREMENTS:

A new GFCI circuit breaker must be used for your spa installation. Do not use an existing breaker, as its condition is unknown.

The 230V 50Hz systems use a single electrical service (one 13 amp or one 20 amp breaker) using 3 wires. The 3 wires are 1 line (brown) + 1 neutral (blue) + 1 protective earth (green/yellow) ON either system, the spa must be connected to a dedicated GFCI circuit breaker that is not shared with any other equipment. Do not use extension or plug type cords of any kind.

CONFIGURING SYSTEM

CONFIGURING YOUR SPA TO 13 OR 20 AMP SYSTEM:

When using a 230V 50Hz 13 amp or 20 amp system, attach the wires to the terminals as shown below. With a 13 amp system, the spa heater will ONLY work when the pump is in the low speed. Using a 20 amp system will allow the heater to work when the pump is in either the low or high speed.

NOTE: When using the 20 amp system move dip switch 10 down to the OFF position, this will allow the heater to work with the pump in High Speed.

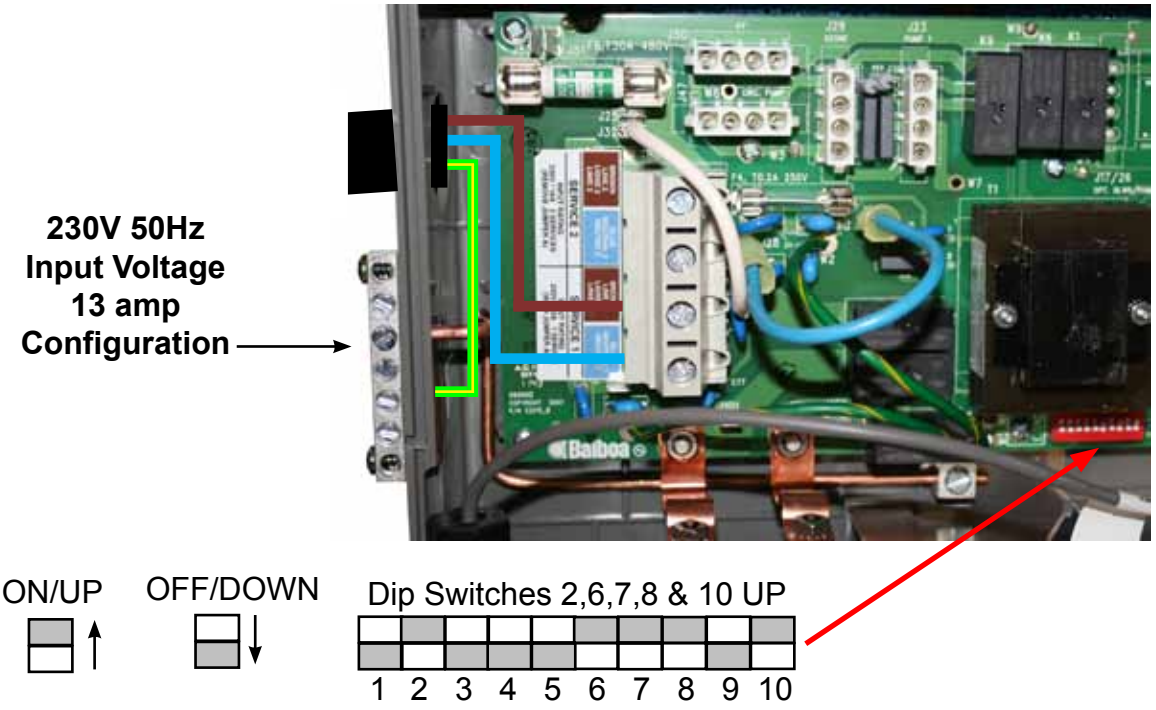

It is recommended that a licensed electrician install the power to your spa in accordance with your national electric code and/or any local electrical codes in effect at the time of installation.

MODE OPTION (DIP SWITCH 7 SETTING)

The spa has been pre-programmed to operate in the Standard Operational Mode ONLY. The spa may be configured to have three operational modes. To change your spa to allow 3 different modes, we recommend you contact Customer Service. Dip Switch #7 on the power supply board must be moved down into the “off” position allowing you to select either Standard, Economy, or Sleep modes using the topside control panel (see page11).

CONTROL PANEL OPERATION

INITIAL START-UP - When the spa is first powered up it will go into priming mode, indicated by *Pr*. The priming mode will last for less than 5 minutes and then the spa will begin to heat and maintain the water temperature when in Standard Mode. Your spa has been designed so that it will automatically heat the water to the factory set temperature of 38°C unless you set the spa to a different temperature. If power is disconnected from the spa, it will automatically revert back to the factory set temperature of 38°C when power is reapplied.

a) *Jets* b) *Light* c) *Down* heat d) *Up* heat

TEMPERATURE ADJUSTMENT (26°C - 40°C)

The temperature can only function between 26°C - 40°C. The last measured temperature will constantly display on LCD.

Press the *Up* or *Down* buttons to display the set temperature. Each time either button is pressed again, the set temperature will increase or decrease depending on which button is pressed. After three seconds, the LCD will automatically display the current spa temperature.

JETS OPERATION

Firmly press the *Jets* button once to activate the low speed of the pump and again for the high speed. Firmly press the *Jets* button again to turn off the pump. If left running the low speed of the pump will automatically turn off after 4 hours. The high speed pump will automatically turn off after 15 minutes. The low speed of the pump may also activate for at least 2 minutes every 30 minutes to detect the spa temperature and then to heat to the set temperature if needed, depending upon mode. When the low speed turns on automatically it cannot be deactivated from the panel: However the high speed may be started.

MULTI COLOR LED LIGHT

Press the *Light* button once to turn on the light. Press the button again to turn the light off. Every time the light is quickly turned off and back on, a new color will illuminate. There are 6 different colors followed by a color wheel. The color wheel starts out as a white light. Exiting the color wheel may require you to press the *light* button quickly 4 times or more.

NOTE: The blue color is the first of the 6 colors followed by the color wheel. If left on, the light will automatically turn off after 4 hours of operation.

OPERATIONAL MODE

The Standard Mode is the default operational mode preset from the factory. In order to program the spa to operate in the other 2 modes allowing you to change the mode, dip switch #7 on the control box board must be moved downward into the "off" position (See page 9).

If your spa has been modified to allow mode change, press the *Up* or *Down* button, then while the display is flashing press the *light* button to go into Standard, Economy or Sleep Mode.

CONTROL PANEL OPERATION

STANDARD MODE: Is programmed to maintain the desired temperature.
St will be display momentarily only when dip switch 7 is OFF. **Note:** The last measured spa temperature displayed is current only when the pump has been running for at least 2 minutes.

ECONOMY MODE: Heats the spa to the set temperature only during filter cycles.
Ec will display solid when temperature is not current and will alternate with temperature when temperature is current (Ec will only display if dip switch 7 is OFF, see pg. 9).

SLEEP MODE: Heats the spa within 6.5º C of the set temperature only during filter cycles.
SL will display solid when temperature is not current and will alternate with temperature when temperature is current (SL will only display if dip switch 7 is OFF, see pg. 9).

PRESET FILTER CYCLES

The first filter cycle (FC) begins 6 minutes after the spa is powered up. The second filter cycle begins 12 hours later. Filter duration is programmable for 1, 2, 3, 4, 5, 6, 7, 8 or 12 (FC) hours.

- The default filter time is 1 hour.
- To program, press *Down* or *Up* then press *Jets*. Press *Down* or *Up* to adjust
- Press *Jets* to exit programming. Pump low speed will run for the duration.

The low speed of the pump runs during filtration and the ozone generator will be enabled.

FREEZE PROTECTION

If the temperature sensors within the heater detect a drop to below 7ºC, the pump will automatically activate to provide freeze protection. The equipment stays on until 4 minutes after the sensors detect that the spa temperature has risen to 7ºC or higher.

⚠ **Warning! Shock Hazard! No User Serviceable Parts.**
Do not attempt service of this control box. Contact Customer Service for assistance. Follow all owner manual power connection instructions. Installation must be performed by a licensed electrician and all grounding connections must be properly installed.

⚠ **WARNING! DO NOT ENTER SPA IF WATER IS TOO HOT**

Water is too hot. Overheat protection heater is deactivated. Spa water temperature is above acceptable limits. When the actual water temperature is approximately 1ºC above the set temperature, the jet pump will stop operating to reduce (frictional) heating. If the spa water temperature continues to rise and gets above 44ºC, the spa will go into an “OH” overheat condition.

To Correct Condition:

1. Remove the spa’s cover and allow your spa to cool down.
2. Reduce the temperature setting.
3. When the water temperature drops below 41ºC, the spa will resume normal operation.
4. If the water does not drop below 41ºC, contact Customer Service.

Note: Your spas topside control panel has been designed to include:

a) *Jets* button
b) *Light* button
c) *Down* heat button
d) *Up* heat button

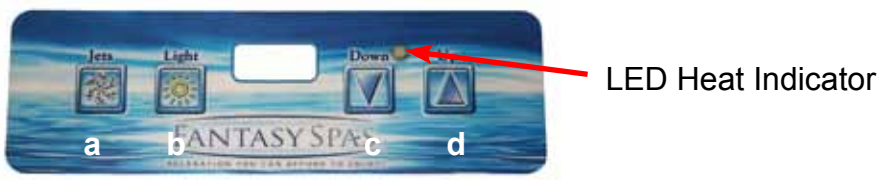

DIAGNOSTIC LCD MESSAGE

Message	Meaning	Action Required
	No message on display. Power has been cut off to the spa.	The control panel will be disabled until power returns. Spa settings will be preserved until next power up.
- -	Temperature unknown.	After the pump has been running for 2 minutes, the temperature will be displayed.
HH	"Overheat" – The spa has shut down. One of the sensors has detected 48ºC at the heater.	DO NOT ENTER THE WATER. Remove the spa cover and allow water to cool. Once the heater has cooled reset by pushing any button. If spa does not reset, shut off the power to the spa and call Customer Service.
OH	"Overheat" – the spa has shut down. One of the sensors has detected that the spa water is 44ºC.	DO NOT ENTER THE SPA. Follow same instructions as above.
IC	"Ice" – Potential Freeze condition detected.	No action required. The pump will automatically activate regardless of spa status.
SA	Spa is shut down – The sensor that is plugged into the Sensor "A" jack is not working.	If the problem persists, contact Customer Service. It may appear temporarily in an overheat situation and disappear at cool.
Sb	Spa is shut down. The sensor that is plugged into the Sensor "B" jack is not working.	If the problem persists, contact Customer Service. It may appear temporarily in an overheat situation and disappear at cool.
Sn	Sensors are out of balance. If alternating with spa temperature, it may just be a temporary condition. If flashing by itself, spa is shut down.	If problem persists, contact Customer Service.
HL	A significant difference between temperature sensors has been detected. This could indicate a flow problem.	Check water level in spa. Refill if necessary. If the water level is okay, make sure the pumps have been primed. If problem persists, contact Customer Service.
LF	Persistent low flow problem (Displays on the fifth occurrence of "HL" message within 24 hours.) Heater is shut down, but other spa functions continue to run normally.	Follow action required for "HL" message. Heating capability of the spa will not reset automatically; you may press any button to reset.
Dr	Possible inadequate water, poor flow, or air bubbles in detected in the heater. Spa is shut down for 15 minutes.	Check water level in spa. Refill if necessary. If water level is okay, make sure the pumps have been primed. Press any button to reset, or this message will automatically reset within 15 minutes. If problem persists, contact Customer Service.
dY	Inadequate water detected in heater (Displays on third occurrence of "Dr" message.) Spa is shut down.	Follow actions required for "Dr" message. Spa will not automatically reset. Press any button to reset.

SPA COMPONENT OPERATION

AIR CONTROL VALVE

The air control valve serves to regulate the amount of air mixed with the water when the jets are operational. Rotate all the air control valves counterclockwise and observe the increased jet action. Rotating the air control in the opposite direction to turn air off and allow the jets to work with water only. Turn the air controls off when the spa is not in use, this will prevent cold air from entering the spa and will keep heating cost to a minimum. The ozone jet, will always produce air bubbles when pump is on.

WHIRLPOOL JET (WHEN EQUIPPED)

The Whirlpool Jet is located below the water line at or near the control panel area, in the wall. This jet is a diverter valve and high capacity jet that has a larger diameter than the hydrotherapy jets. The whirlpool jet is turned on and off by rotating the jet face. Because, there is a substantial amount of water pressure when the jet is in operation, you must turn the pump off or to low speed before attempting to rotate the jet face. As the whirlpool jet open position is increased it will begin turning off all of the hydrotherapy jets. One of the two air control valves is dedicated to the this jet.

HYDROTHERAPY JETS

The hydrotherapy jets are recessed in the wall of the spa. Rotate the medium jet faces counter-clockwise to turn the jets on, clockwise to turn the jets off. Turning a jet on or off will increase or decrease the effects of any jets not in the closed position.

MULTI-COLOR LED LIGHT

Your spa is installed with a LED multi-color light, pressing the light switch button on and off will cause the light color to change to your desired color.

OZONE GENERATOR (OPTIONAL EQUIPTMENT)

The ozone system enhances the quality of the spa water when used to supplement the spa owner’s regular water maintenance program. Contrary to some information circulated throughout the pool and spa industry regarding ozone systems, ozone **CAN'T** be used as a single-source sanitizer, water clarifier, anti-foamer, and mineral chelating agent. A secondary source sanitizer must be used to maintain 3.0 - 5.0 ppm of Free Available Chlorine (FAC). Watkins Manufacturing Corporation recommends that a chemical maintenance program based on recognized and documented industry standards still be followed when using an ozone purification system to assure water sanitation and the highest quality purified water.

WATERFALL (WHEN EQUIPPED)

Your spa has a control valve to operate the amount of flow through the waterfall from no flow to a steady stream. This valve is located next to the waterfall. **Note:** The air control valve and the waterfall flow valve may look and function exactly the same and may operate in the same way, however; they will be separate components.

FILL UP AND START-UP INSTRUCTIONS

The following procedures should be followed on initial startup and whenever the spa is drained for routine maintenance.

FILLING THE SPA WITH WATER

1. Clear all the debris from your spa.
2. Be sure to open all jets to allow as much air as possible to escape from the plumbing during the filling process.
3. Use a garden hose to fill your spa with water.

NOTE: Do not use hot or softened water.

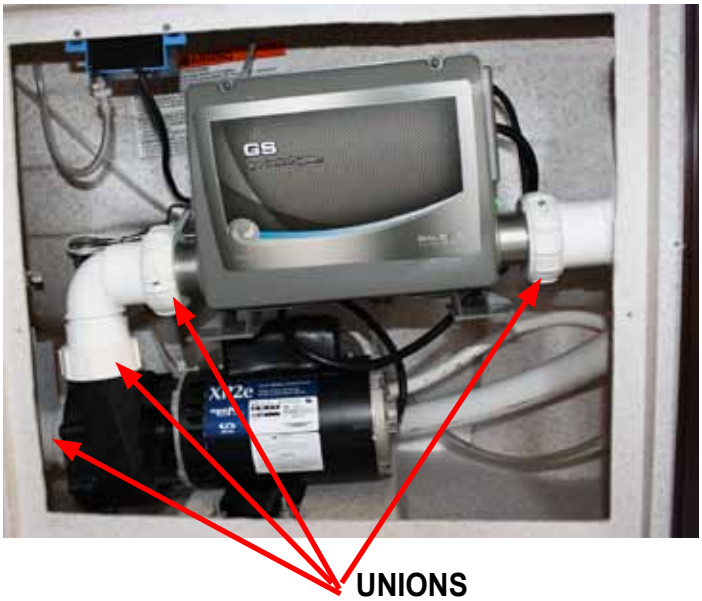

4. As the water level rises, check inside the equipment compartment for water leaks. It may be necessary to tighten unions and/ or fittings that may have loosened during delivery. There is no need to call for service; this can easily be done. If assistance is required, contact a Customer Service representative at +1 (760) 305-4400
5. Under normal circumstances keep the water level half way between the top of the spa and the top of the gray filter ring or just above the highest jets (whichever is higher).

   Failure to keep enough water in your spa may result in damage to your system and invalidate your warranty. If your spa filter is sucking in air causing the pump to cavitate, you need to add water!
6. Check the filter installation and make sure the filter is not loose.

APPLYING POWER

1. Turn power to spa "ON" from the main panel at the house and the subpanel.
2. Press the *Jets* button on the topside control panel to activate the spa. Rotate all the air control valves counterclockwise and observe the increased jet action (air mixed with water).
3. While the pump is running check again for water leaks at the drain spigot, unions, or fittings in the equipment compartment (leaks may have occurred during transit). If water is leaking from one of these areas, there is no need to call for service. Simply tighten the fitting. If assistance is required, call a customer service representative at +1 (760) 305-4400.
4. After checking your spa for leaks it is now time to adjust your spa settings. Press the *Up* or *Down* button on your topside control panel until the display indicates your desired temperature is set.

ADDING START-UP CHEMICALS

WATER CHEMISTRY GUIDELINES

The following step-by-step instructions are a recommended guideline for balancing water chemistry. If unsure about any step in the process, please contact a Customer Care Associate at +1 (760) 305-4400 or by email at ahsservice@watkinsmfg.com.

Initially, it is advisable to identify what minerals (e.g. iron) are present in the local source water. This will provide a better understanding of how to treat the water. Please follow the four steps below and be sure to achieve the correct levels in each area before moving onto the next step.

STEP #1: ESTABLISH PROPER PH LEVEL:

The recommended range for pH is between 7.2 and 7.8. If the reading is too high, lower the pH by using a pH Down/Decreaser (sodium bisulfate). If the pH level needs to be increased, do so with a pH Up/Increaser (sodium hydrogen carbonate). Any pH Up or Down should be added one teaspoon at a time, waiting one-half hour between application and re-measuring.

STEP #2: MEASURE TOTAL ALKALINITY:

The ideal range is between 80-120 parts per million (PPM). If the total alkalinity is too high, it should be reduced by using an Alkalinity Down/Decreaser (sodium bisulfate). If the total alkalinity is too low, it can be increased by adding an Alkalinity UP/Increaser (sodium bicarbonate or sodium hydrogen carbonate). These products should be added in small amounts – 5 milliliters at a time. After adding 5 milliliters, wait one half hour before re-measuring. Once the safe range of total alkalinity is established, proceed to the next step.

STEP #3: DETERMINE CALCIUM HARDNESS:

It is important to bring the calcium reading to between 100-250 PPM. If the reading requires adjustment, it should now be corrected. If the water is too soft (a low reading) calcium hardness should be added to the water to increase the PPM reading. If the water is too hard (a high reading), it can be corrected by either: (A) a mixture of hard and soft water added to attain a reading in the safe range, or (B) addition of stain and scale control. If calcium hardness is a problem with the local source water (either too hard or too soft) a test kit, which measures calcium hardness, is essential.

STEP #4: SANITIZING:

After steps 1-3 are complete, **the spa must be sanitized using Chlorine (sodium dichlor)**. Add 2 teaspoons of Chlorine, and increase as necessary to reach a level of 3-5 ppm. Check and maintain this level weekly, and before and after using the spa. ***IMPORTANT NOTE:*** *A granulated sodium dichlor is highly recommended for sanitizing spa water*. ***Never use a sodium trichlor tablet in any form even with a floater****. As with any other chemicals, the sanitizer should be introduced to the spa with the jets running a minimum of 15 minutes.*

WEEKLY SHOCK:

Using a potassium monopersulfate (MPS) shock, add approximately 60 milliliters spreading it over the water while the jets are running. Shocking is achieved by adding the MPS to turbulent water. Leave the cover up until the jets automatically turn off. The spas are equipped with an automatic time out feature that will shut the jets off after 15 minutes. Then return the cover to the closed position to maintain heat.

FILTER CARTRIDGE MAINTENANCE

Every two weeks, the filter cartridge should be cleaned to remove the objects and particles that have lodged in the cartridge pleats. Using household water pressure and a garden hose with a pressurized nozzle, push water from inside to outside of the pleats, forcing all the trapped particles out. **NOTE:** Never run your spa without a filter cartridge! This will invalidate your warranty.
NOTE: Filter cartridges should be replaced every six to eight months or earlier when needed. Dirty filters can cause your spa pump to burn out and will invalidate your warranty.

FILTER CARTRIDGE REMOVAL AND CLEANING INSTRUCTIONS

Spa uses a screw in filter cartridge that is easily removed.

- Turn off the power to the spa, (by turning OFF the subpanel breaker).
- Push down slightly and turn filter basket counter clockwise to unlock, then pull the basket and weir out.
- Unscrew the filter cartridge counter clockwise and bring it out of the spa (requires many turns).
- Rinse cartridge using a garden hose. Rotate and separate filter pleats while spraying water to remove all dirt and debris possible. Let filter dry and look for calcium deposits (scaling) or an oil film. If you find these, you will need to deep clean your filter cartridge with a “spa filter cleaner” solution to break down and remove unwanted deposits and oils. (For longer filter life you should soak filter regularly.)

CAUTION! Always use proper eye protection when using chemicals, or high-pressure water. Read instructions on cleaning products and follow applicable safety and warning instructions listed on label.

CAUTION! Never scrub the filter cartridge with a brush, as this will cause the filter to wear out and

come apart. Never let the spa pump run without a filter cartridge in the skimmer compartment. Running the spa without a filter cartridge may permit debris to enter the spa plumbing and void the warranty!

- Replace filter cartridge, then reinstall basket and weir, (insert and rotate clockwise to lock into position). DO NOT OVERTIGHTEN!
- Turn spa’s power back on.

SPA MAINTENANCE

SURFACE CARE

Do not use solvents or abrasive cleaners to clean the spa. Typically, a mild detergent and water will resolve cleaning issues.

COVER CARE

Please keep your cover free from dirt at all times. Use a cover cleaner or a warm mild soapy water to clean the surface. Do not use any silicone-based products, as it will dry and may eventually crack the vinyl. **NOTE:** Do not stand on the cover at any time. Remove the cover when adding chemicals to your spa. This will extend the life of your cover. The gasses from burned off chemicals will be trapped under the cover, if not removed. These gasses may erode the protective lining of the foam inserts. This will not be covered under warranty.

CABINET CARE

Little maintenance is required to keep your spa cabinet looking good.
Spa cabinet product should be cleaned as needed to remove dirt and debris.

- NO abrasive or harsh chemicals should be used on the spa's cabinet.
- NO solvents or cleaners containing aromatic solvents should be used on the spas cabinet.
- Hot soapy water is the best choice for cleaning the spa's cabinet.

AVOID PROLONGED EXPOSURE TO DIRECT SUNLIGHT OR EXCESSIVE TEMPERATURES (38ºC) TO AVOID YOUR SPA CABINET FROM BUCKLING.

SPA LED REPLACEMENT

- Turn OFF the power to the spa.
- Remove the equipment compartment access door.
- Locate the rear of the spa light.
- To remove the LED board, turn outside housing counter clockwise ¼ turn, and pull out and remove LED board from socket.
- Replace by reversing the above steps.

DRAINING OR WINTERIZING

Every three to six months, depending upon the water condition, you need to renew your water.

CAUTION: READ THIS BEFORE DRAINING YOUR SPA

- To prevent damage to the spa's components, **TURN OFF SUBPANEL BREAKER BEFORE DRAINING. Do not power back up until your spa has been refilled with water.**
- There are certain precautions to keep in mind when draining your spa. If it is extremely cold, and the spa is outdoors, freezing could occur in the plumbing or the equipment.
- Do not leave the spa's shell (inside surface) exposed to direct sunlight.

DRAINING YOUR SPA

- If draining for the first time. Pull the hose bib out a few inches from the spa (located in the recess under the spa, just right and below the equipment access door)
- Unscrew and remove the drain cap.
- Attach hose bib to a garden hose and direct to an appropriate draining area, keeping the hose below the water line.
- After your spa is empty, clean the shell and filter cartridge. See "Spa Maintenance" section.
- After cleaning, remove garden hose, replace drain cap and push the hose bib back into the recess.
- Follow the "Fill up and Start-up Instructions" on page 14.

WINTERIZING YOUR SPA

If you plan to store your spa for the winter, you must also use a wet-vac to clean out the water lines to ensure they are free of any water. Water left in the lines might freeze and damage the lines and jets.

1. It will be necessary to remove all water from the interior plumbing.
2. Remove the floating weir, basket, and filter cartridge. Clean the filter cartridge and store in a dry place. Attach the vacuum hose to the **vacuum side** of the shop vac and thoroughly dry the filter compartment.
3. Using the shop vac, remove the water starting with the jets at the top and moving to the ones at the bottom of the spa. **NOTE:** When removing the water from jet openings, you may notice suction coming from another jet. With the help of a second person, block off any suction from the other jet using a large rag or cloth. This will help pull out the water that is trapped deep inside the main line.
4. Thoroughly dry the spa shell with a clean towel.
5. Using a funnel, pour Propylene glycol anti-freeze into the filter suction fittings and jet outlets. **CAUTION: Use only Propylene glycol as your anti-freeze. This is non-toxic. NEVER use automobile anti-freeze since it is toxic.**
6. Remove the pump drain plug located on the front of the pump housings. Allow all water to drain out. Place the drain plug in a reclosable plastic storage bag and store near the pump. Replace the drain plugs on start-up.
7. Unscrew the suction/discharge pump and heater unions and allow the water to drain. Leave union loose. **NOTE:** Tighten unions before filling spa.
8. Replace the equipment compartment door and secure with screws.

Note: Damage caused by improper winterizing will not be covered under warranty. You may want to contact Customer Service for proper winterizing.

TROUBLESHOOTING PROCEDURES

In the event the spa is not working the way it should, please first review all the installation and operating instructions in this manual and check the message on the panel display. If you are still not satisfied it is working properly, please follow the appropriate troubleshooting instructions.

CAUTION! WARNING! SHOCK HAZARD! No User Serviceable Parts.
Do not attempt service of the control box. Contact Customer Service for assistance. Follow all owner's manual power connection instructions.

NO COMPONENT OPERATION

Check the following:
1. Is there power to the spa?
2. Is the household circuit breaker tripped?
3. Is the subpanel (230V) tripped?
4. If 1, 2 or 3 are yes contact Customer Service for assistance.

PUMP DOES NOT OPERATE, BUT THE LIGHT DOES

Press the *Jets* button:
The pump operates but no water flows to jets. Pump may not be properly primed. This can happen after the spa is drained and refilled. Press the *Jets* button several times, never leaving the motor on for more than 5-10 seconds at-a-time with no water coming of of jets.

POOR JET ACTION

1. Press the *Jets* button to make certain the pump is on.
2. Rotate all the air control valves counterclockwise and observe the increased jet action.
3. Make sure the water level is half way between top of spa and top of the gray filter ring.
4. Check for dirty filter. Clean, if necessary.
5. Make sure all jets are in the open position (turn counterclockwise).
6. Make sure the gate valves are in the open position and locked (UP). See Fill-Up section.

WATER IS TOO HOT

1. Check desired temperature on topside control.
2. Check for a Diagnostic Message (in Control Panel Operation section).

OH - Overheat (spa is deactivated) **DO NOT ENTER THE WATER.**
If the spa has overheated you should remove the cover to promote heat reduction. The spa control system should reset itself when the water temperature reduces below 41ºC. When the spa temperature falls below the reset you can push any button on the topside control to reset the control system. If the spa will not reset, then shut off power to the spa and call Customer Service at +1 (760)-305-4400.

Under extreme and/or prolonged weather conditions it is possible for the ambient temperature to exceed 41°C; effecting the water temperature of the spa and causing it to overheat. These conditions could cause the spa sensors to produce an OH message and prevent the usage of your spa during these conditions. The location of your spa should be reconsidered to reduce the outside temperature around the spa. For example, you may need to prevent direct sunlight on any surface of your spa. Regardless, do not enter your spa if the temperature is above 40°C.

Should checking the above steps fail to correct the problem, please contact Customer Service at +1 (760)-305-4400.

CE

PART # 303487 REV. C (03/13)